This drawing is property
of company Zilmet S.p.A.
All rights reserved

Technical drawing HYDRO-PLUS E

STANDARD MODEL
5÷24(L)

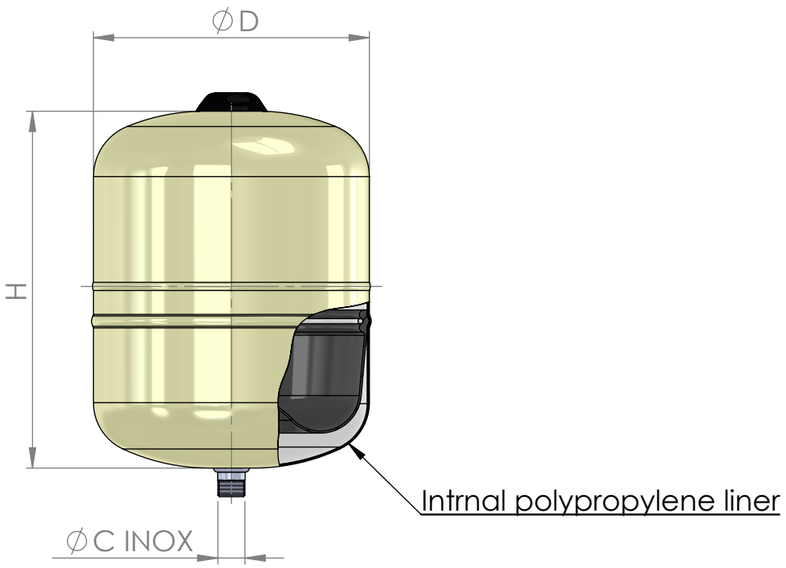
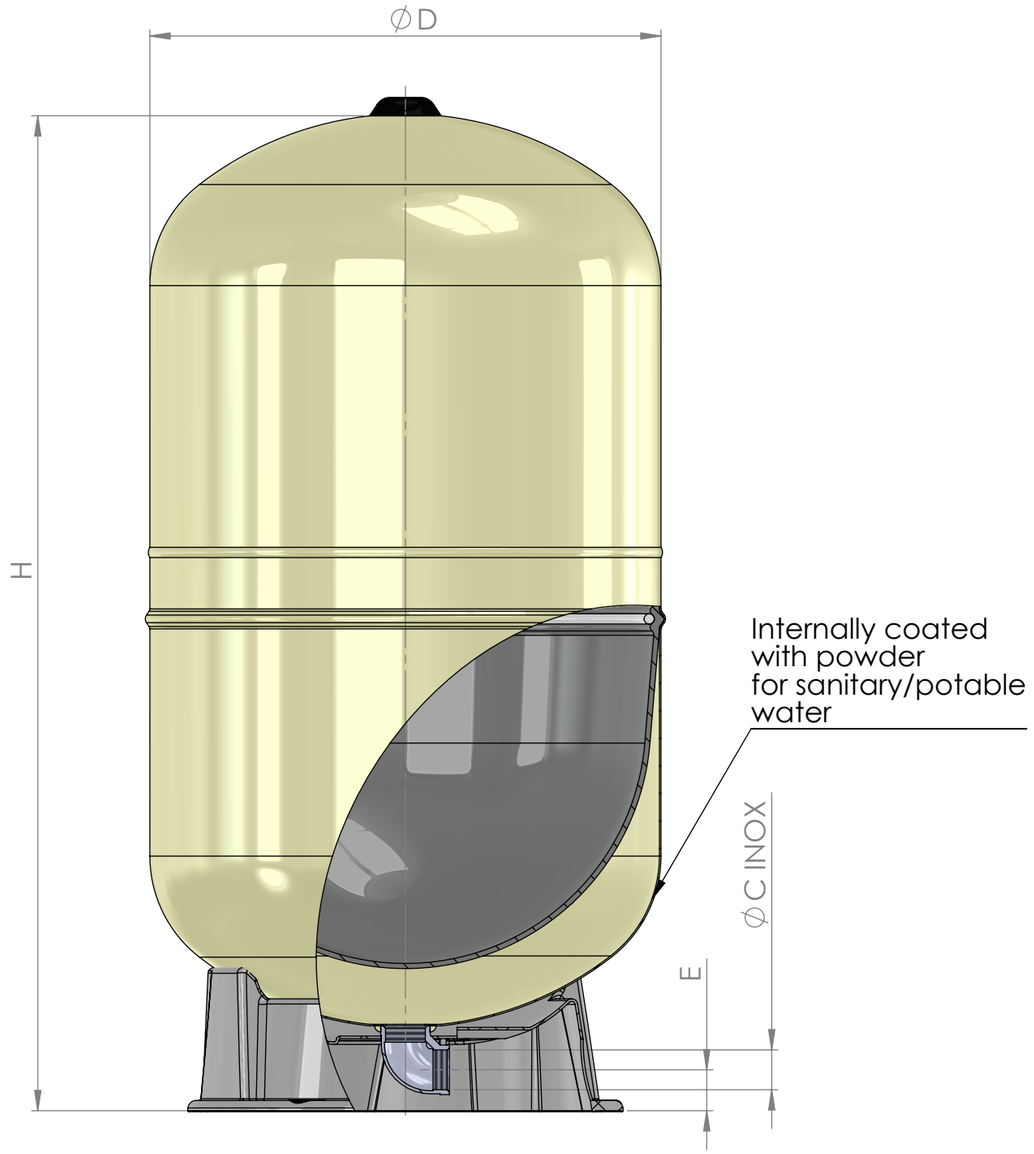
STANDARD MODEL
80÷450(L)